CATEGORY	DESCRIPTION	P/N #
CONNECTOR	3288 金针90度插板全塑无灯	MJ3288-BX11-HRN1

REV.	ECN NO	DESCRIPTION	REVISED	DATE
A01	————	New Release	XSY	2016.10.12

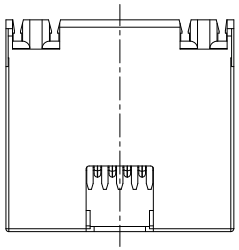

MJ3288-BX11-HRN1

X	Terminal Plating
0	G/F Plating
1	Au 3u" Plating
2	Au 6u" Plating
3	Au 15u" Plating
4	Au 30u" Plating

1.RJ ELECTRICAL CHARACTERISTICS
- 1-1: VOLTAGE: 125V AC RMS
- 1-2: CURRENT RATING: 1.5A
- 1-3: CONTACT RESISTANCE: 40mΩ MAX.
- 1-4: INSULATION RESISTANCE: 500MΩ MIN.
- 1-5: DIELECTRIC WITHSTANG VOLTAGE : 1000V AC
- 1-6: OPERATURE TEMPERATURE: -40°C~80°C

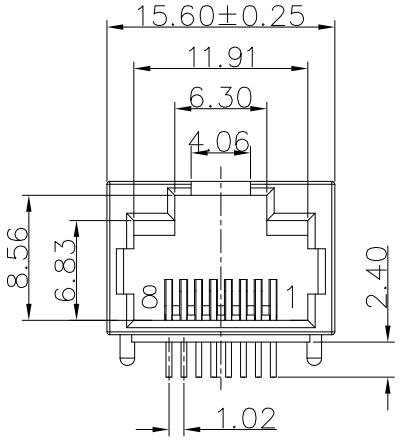

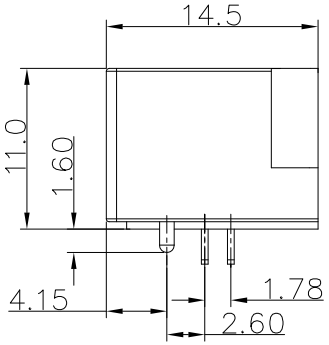

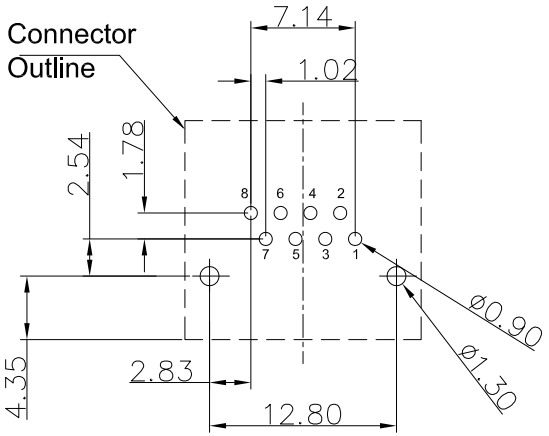

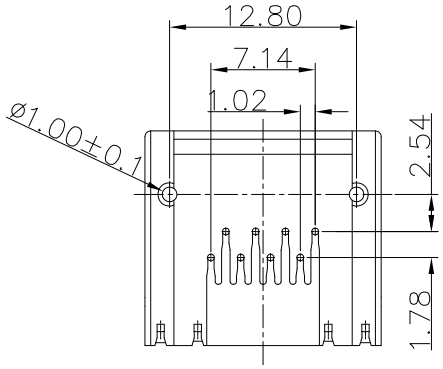

Recommend PCB Layout
(Jack Top View)
Tolerance: ±0.05mm

東莞市合陵電子有限公司
DongGuan HeLing Electronic Co.,LTD

UNLESS OTHERWISE SPECIFED TOLERANCES	SCALE: 1/1	UNIT: mm		DWG.NO:	
	SIZE: A3	PAGE: 1 OF 1	REV:A01		
DECIMALS: X :±0.5, X.X :±0.3, X.XX :±0.2 / ANGLES: X :±2°, X.X :±1°	APPROVED BY	CHECKED BY		PREPARED BY	
	DICK	XSY		XSY	
	CUSTOMER COPY				

NO.	PART NAME	Q'TY	MATERIAL	PLATING & COLOR	Remark
b	TERMINAL	8	PHOSPHOR BRONZE ø0.46mm	Au PALTING	
a	HOUSING	1	PA9T UL94V-0	BLACK	